MiTek Electronics & Communications
www.mitekcorp.com

THIS DRAWING AND DATA EMBODY PROPRIETARY DESIGNS AND INFORMATION WHICH IS THE CONFIDENTIAL PROPERTY OF MITEK CORPORATION. NONE OF WHICH SHALL BE COPIED, REPRODUCED, DISCLOSED TO OTHERS, PROPOSED OR USED IN WHOLE OR IN PART, FOR ANY PURPOSE WITHOUT EXPRESS WRITTEN PERMISSION OF A DULY AUTHORIZED AGENT OF MITEK CORPORATION. THIS DRAWING IS SUBJECT TO RECALL BY MITEK CORPORATION AT ANY TIME. ALL PATENT RIGHTS AND COPYRIGHTS ARE RESERVED BY MITEK CORPORATION.

MITEK PART # / DRAWING #	1-11245
TITLE	TILE BRIDGE-SHS-3T2-24 GA-GAVL STEEL
DRAWN BY	TJS
DATE DRAWN	7/30/19
SCALE	1:3
CHK'D BY	
CHK'D DATE	
SHEET #	1 OF 1
ENG. APPROVAL	
DATE	
REV.	A.
MATERIAL:	CRS, ZINC PLATED
FINISH:	RoHS ZINC PLATED

ASME Y14.5M-2009

TOLERANCES (EXCEPT AS NOTED)
UNITS - MILLIMETERS

X.X	±	0.5
X.XX	±	0.38
X.XXX	±	0.125
ANGULAR	±	1°
HOLES	±	0.125

REVISIONS

REV.	DESCRIPTION	DATE	ECO # / MPER #	ISSUED BY
A	RELEASED TO MP	9/20/2021	MPER 1-12726	DEA

NOTES: UNLESS OTHERWISE SPECIFIED

1. REMOVE ALL BURRS AND SHARP EDGES.
2. BEND RELIEF AS REQUIRED.
3. FINISHED PART SHALL BE FREE OF OILS, LUBRICANTS, CONTAMINANTS AND VISIBLE RAW MATERIAL MARKINGS.

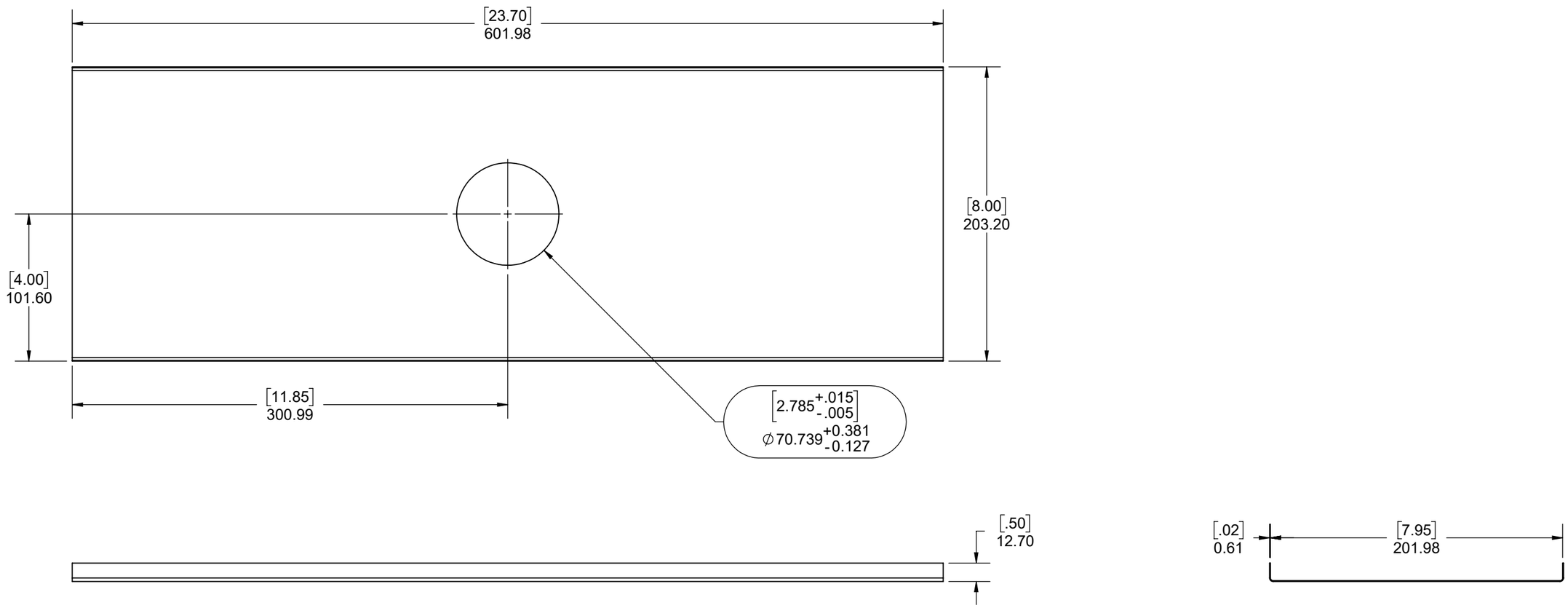

MITEK COMMON B
REV A DATE 02/18/2011